Airpol®

Przedsiębiorstwo Produkcji Sprężarek Airpol Sp. z o.o.
ul. Nieszawska 15c, 61-021 Poznań, Polska

Dział Sprzedaży +48 61 650 45 67, airpol@airpol.com.pl
Dział Serwisu + 48 694 477 251, +48 61 650 45 75, serwis@airpol.com.pl

www.airpol.com.pl

Compressor certificate

1.	Manufacturer:	Przedsiębiorstwo Produkcji Sprężarek Airpol Sp. z o.o. ul. Nieszawska 15c, 61 – 021Poznań, Poland
2.	Compressor type:	Deno 30
3.	Factory number:	S09460625
4.	Capacity:	325 m^3/h
5.	Motor power:	30 kW
6.	Overpressure:	8 bar
7.	Weight :	720 kg
8.	Year:	2025

Compressor is made according to the manufacturing and acceptance requirement sand comply with the norms and directives specified in the attached declaration of conformity.

Stamp

Date 16.06.2025

Signature of the factory acceptance inspector

PRZEDSIĘBIORSTWO PRODUKCJI SPRĘŻAREK "AIRPOL" Spółka z o.o.
61-021 Poznań, ul. Nieszawska 15 c
tel. 61 650-45-67,
NIP 782-00-06-843 Regon 630617391

SZEF DZIAŁU ZAPEWNIENIA JAKOŚCI
mgr inż. Robert Hoffa

Przedsiębiorstwo Produkcji Sprężarek Airpol Sp. z o.o.
ul. Nieszawska 15c, 61-021 Poznań, Polska

Dział Sprzedaży +48 61 650 45 67, airpol@airpol.com.pl
Dział Serwisu + 48 694 477 251, +48 61 650 45 75, serwis@airpol.com.pl

www.airpol.com.pl

DECLARATION OF CONFORMITY EC

Hereby declares with full responsibility, that the following products:

Compressor:
Deno 30
S09460625

to which this declaration applies, conform with:

- 2014/68/EU Pressure Equipment Directive
- 2006/42/EC Machinery Directive
- 2014/35/EU Low Voltage Directive
- 2014/30/EU Electromagnetic Compatibility Directive

It comply with the harmonized standards: EN ISO 12100:2012, EN 60204-1:2018-12
EN IEC 61000-6-4:2019-12, EN-1012-1:2011, PN-N- 01307:1994

The compressor has been marked with the following marking:

CE

President

(-) Marek Jajeśniak

Poznań, 2025-06-16

Airpol

Przedsiębiorstwo Produkcji Sprężarek Airpol Sp. z o.o.
ul. Nieszawska 15c, 61-021 Poznań, Poland
tel. +48 61 650 45 67, e-mail: airpol@airpol.com.pl
www.airpol.com.pl

Customer:	Deno Compressors B.V.	Drawing No:	
Compressor:	30,0 kW air cooled	Serial No:	S09460625
Controller:	MS 686		
Electric motor	HOYER 30,0 kW	Tested by:	
Type of start	Y/Δ	Date:	16. 06. 2025

Electrical installation marked code IP54 according to standard PN-EN-60529.
Complies with safety regulations according to standards: PN-EN 60204-1:2010, PN-EN 60204-1:2010/AC:2011, PN-EN 60947-1:2010, PN-EN 60947-1:2010/A1:2011, PN-EN 1012-1:1999.

No	General check points	Result		
		Yes	No	n.a.
1.	The control box working properly	✓		
2.	Built according to specification of customer	✓		
3.	Built according to electrical drawing	✓		
4.	All components marked	✓		
5.	All wires marked	✓		
6.	Torques and fittings correct	✓		
7.	Controller working properly	✓		
8.	Parameters of controller set correctly	✓		
9.	Parameters of softstart set correctly			✓
10.	Parameters of frequency controller set correctly			✓
11.	Heater, fan, light of electric box are correct			✓
12.	Name plate with number			✓
13.	Drawing of electric diagram in the electrical box	✓		
14.	Technical documentation – manual, drawings	✓		
15.	Cable glands mounted and properly tightened	✓		
16.	Control box painted and cleaned	✓		
17.	Control/display panel mounted correctly	✓		
18.	Fuses are correct	✓		
19.	Control lamps are correct			✓
20.	Switches are correct	✓		
No	**Check points according to the norms**	**Result**		
21.	Size of power and control cables correct	✓		
22.	Size of fuses and transformer correct	✓		
23.	Protective grounding PE correct	✓		
24.	Bare cables secured	✓		
25.	Main switch mounted correctly			✓
27.	Emergency STOP pushbutton correctly	✓		
28.	Thermal overload of electric motors are correct	✓		
29.	Safety settings of controller/softstart/frequency converter are correct	✓		
30.	There are no loose cables	✓		
31	Other			

PRZEDSIĘBIORSTWO PRODUKCJI SPRĘŻAREK "AIRPOL" Spółka z o.o. 61-021 Poznań, ul. Nieszawska 15 c tel. 61 650-45-67, NIP 782-00-06-643 Regon 630517391

SZEF DZIAŁU ZAPEWNIENIA JAKOŚCI

mgr inż. Robert Hoffa

CHECK LIST FOR TESTING			
Order:	**Date:** 16. 06. 2025		
Compresor: DENO 30	S09460625		
E-motor type: HMC3 200L 1-2	DK1246300004		
Kw/rpm/voltage/Amp @ 50Hz:			
Kw/rpm/voltage/Amp @ 60Hz:	30/480/43,9/3540		
Air end type: DSU70	8374		
Year of make:	2025		
Max.rpm	8 000		
Cooler type:	R14367		
Factory number:	S0946		
Test date:	24 bar/water		
V-belt type and quantity:	XPA 1400		
Checks caried out:			
Checking of the fittings and elektical connections	ok.		
Control of the all thermal settings		60	A
Control of value of the fuses in the line: F1/F2/F3		2/2/2	A
Check the value of the transformer protection fuses F4/F5/F6/F7		2/2/2/2	A
Check the oil level and recheck after testing	ok.		
Check the sense of rotation of the compressor and fan	ok.		
Control of the setting of the minimum pressue valve (5 bar)		5,0	bar
Connection to the air receiver	ok.		
Setting of the final pressure		8	bar
Setting of the differential pressure		2	bar
Running as start-stop for 10'	ok.		
Running unload until the automatic stop. Repeat twice	ok.		
Turn the compressor off using the emercency stop direct after starting in order to check any oil leaking from the filter. Repeat twice	ok.		
Running for 2 hours at pressure lower than the maximum pressure and record of the maximum temperature	ok.	85	°C
Running contact test: R6=10=NO	ok.		
Common alarm test: R5=2=NC	ok.		
High pressure alarm:		9	bar
High pressure warning:		8,5	bar
High temperature alarm:		110	°C
High temperature warning:		105	°C
Air end speed loading:			rpm
Motor speed loading:			rpm
Stop time:		8	sec
Idle run time:		240	sec
Oil pressure at 8,0 bar		8,2	bar
Safety valve type and setting:		11	bar
Check of the oil in line	ok.		
Check the presence of any oil leaking	ok.		
Check the alignement and tighten screws and flanges	ok.		
Check the required parameters			
TEST DATA:			
air receiver:1000 liter			
time: 71 sec 2-8 bar			
calc. cap.: 304 m3/hr @ 50Hz, 390V			
Measured Amp at max delivery pressure 8,0 bar:		54	A
Temperatura after load and idle run		71	°C
Pully motor/compressor		150/132	mm

Performed by:

PRZEDSIĘBIORSTWO PRODUKCJI SPRĘŻAREK "AIRPOL" Spółka z o.o.
61-021 Poznań, ul. Nieszawska 15 c
tel. 61 650-45-67,
NIP 783-00-06-643 Regon 630517300

SZEF DZIAŁU ZAPEWNIENIA JAKOŚCI

mgr inż. Robert Hoffa

Przedsiębiorstwo Produkcji Sprężarek Airpol Sp. z o.o. Ul. Nieszawska 15c 61-021 Poznań	Test report No: DZJ/16/06/2025	Date: 16.06.2025
Quality Department		

Pressure test

The subject of the research:

Cooler type : **R 14367**

Factory numbers: **S0946**

Maximum working pressure: **16 bar**

Test pressure: **24 bar**

Medium: **water**

Test manometer: No AP 306 (Ø160, range 0 – 25 bar).

Positive test.

PRZEDSIĘBIORSTWO PRODUKCJI SPRĘŻAREK "AIRPOL" Spółka z o.o.
61-021 Poznań, ul. Nieszawska 15 c
tel. 61 850-45-67,
NIP 783-00-06-843 Regon 630517391

SZEF DZIAŁU ZAPEWNIENIA JAKOŚCI

mgr inż. Robert Hoffa

Airpol®

Przedsiębiorstwo Produkcji Sprężarek Airpol Sp. z o.o.
ul. Nieszawska 15c, 61-021 Poznań, Polska

Dział Sprzedaży +48 61 650 45 67, airpol@airpol.com.pl
Dział Serwisu + 48 694 477 251, +48 61 650 45 75, serwis@airpol.com.pl

www.airpol.com.pl

Pressure vessel passport

Type: KS-50-12

INDEX: MCA8461

Serial number: 19446, 19447.

Airpol®

Przedsiębiorstwo Produkcji Sprężarek Airpol Sp. z o.o.
ul. Nieszawska 15c, 61-021 Poznań, Polska

Dział Sprzedaży +48 61 650 45 67, airpol@airpol.com.pl
Dział Serwisu + 48 694 477 251, +48 61 650 45 75, serwis@airpol.com.pl

www.airpol.com.pl

DECLARATION OF CONFORMITY EU

We declare under sole responsibility that the product:

Pressure vessel for compressed air and oil

Type KS-50-12
serial no. **19446, 19447.**

to which this declaration refers, conforms to the following:
Pressure Equipment Directive 2014/68/UE.

Requirements: Technical Inspection Office Conditions: WUDT/UC/2003

Compliance evaluation procedure for module A2, cat: II

Test report: no. 62689/JN/016/04

Notified body:
UDT – CERT Technical Inspection Office
02- 353 Warszawa
ul. Szczęśliwicka 34
Notified body no 1433

The vessel was subjected to a water pressure test at pressure of 22 bar
The vessel is marked with the following symbol

CE

and notified body number: 1433

President

(-) Marek Jajeśniak

Poznań, dnia 11.06.2025 r.

I. Technical description of the pressure equipment

1. Type: Constant pressure vessel
2. Type: KS-50-12
3. Serial number: **19446, 19447.**
4. Year of manufacture: 2025
5. Vessel technical specification

Maximum working pressure	PS (bar)	12
Maximum test pressure	PT(bar)	22
Capacity	V (L)	50
Calculated pressure	PD(bar)	12
Minimum operating temperature	TSmin (°C)	0
Maximum operating temperature	TSmax(°C)	130
Permissible temperature	TD(°C)	130
Corrosion allowance	c2	0,5
Medium		Air, Oil
Factor for pressure test		Water
Factor category by 97/23/WE		2
The minimum wall thickness including c2: A - Shell B - Bottoms	mm	A= 2,2 B= 2,2

6. Conformity assessment procedure: Directive 2014/68/UE, Module A2, Category II.
7. Destiny: Storage tank
8. Drawing number: 780-155-000.
9. Number of manual: 07/2022

Manual has been compiled in language of the country of destination.

10. Nameplate:

II. Vessel construction materials, drawing number: 580-155-000

Lp.	Name	Character of the material	Norm	Nominal thickness	Type of document/ Approved	Approval number	Heat	PMA number
1.	Mantle	S355J2	EN-10051	3	Atest 3.1	21/338307 01	46908	01/2016
2.	Bottoms 324x3	S355J2	PN-64/M-35411 / DIN28013	3	Atest 3.1	1193/1/T/2025	41894	01//2016
3.	Collar	S355J2	EN-10051	25	Atest 3.1	31384/2020	307243-1	01/2016
4.	Cover:	S355J2	EN-10051	20	Atest 3.1	210/AHK/22/1-1 30461/2024	605264 32255	01/2016
5.	Connector G1/4	S355J2	EN-10025	Ø 25	Atest 3.1	82121650 552023EA69/2017	552023	03//2016
6.	Connector G3/4	S355J2	EN-10025	Ø 40	Atest 3.1	10987/0/2020	386671	03//2016
7.	Connector G1	S355J2	EN-10025	Ø 45	Atest 3.1	82781573 571109E329/2019	571109	03//2016
8.	Connector M52x2	S355J2H	EN-10216-3	Ø 54,0x8,8	Atest 3.1	20923/1/2022	21243	02/2016
9.	Connectors: pipe M36x1,5	S355J2	EN-10210	Ø 51x10	Atest 3.1	41496/1/2015	53648	02/2016
10.	Elbow 42,4x3,6	P265GH	EN-10253	Ø 42,4x3,6	Atest 3.1	6133/1/2016	55322	-
11.	Pipe 48,3x3,2	P235TR2	EN 10216-3	Ø 48,3x3,2	Atest 3.1	21234/1/2022	21750	-
12.	Welding wire	G4Si1	EN ISO 14341-A	Ø1,2	Atest 3.1	308098	00640569	-

During the entire manufacturing process the division of the base material there shall be surveillance of transfer characteristics of the material to identify products manufactured. Moved traits: heat number, name of material.

III. Summary statement of welding technology.

List of welding technology

Lp.	Number of connections	Number WPS	Number WPQR	Welding method	Type of connections
1.	5	5/135/17	01 202 PL-V-17 0384	135	BW
2.	5	2/135/17	5/135/13 01 202 PL-V-16 0681	135	BW
3.	2	7/135/17	01 202 PL-V-17 0801	135	FW
4.	2	10/135/17	01 202 PL-V-17 0384	135	FW
5.	7	6/135/17	01 202 PL-V-17 0383	135	BW / FW

IV. Quality control guidelines for drawing number: 780-155-000

Lp.	Range of research	Test method	Class technology and research	Criteria for evaluation of test results
		VT	PN-EN 970	PN-EN ISO 5817:2009/Ap1:2009 WUDT-UC-WO-W/11
1	100%	+	+	Positive, connectors meet the required level of quality „B"

V. Attachments:

1. Manual number: 07/2022.
2. Instructions WPS attached to the documentation of the manufacturer and UDT-CERT.
3. PMA attached to the documentation of the manufacturer and UDT-CERT.
4. Certified welders attached to the documentation of the manufacturer and UDT-CERT
5. Engineering drawing.

Robert Hoffa

R. Hoffa

Certyfikaty kompetencji nr:
TSP-00701-VT2-01
2527-00701-PED-VT2-00

PROTOKÓŁ BADANIA WIZUALNEGO VISUAL INSPECTION PROTOCOL	Nr / No: VT-19446-19447
	Strona 1 z 1 / Page 1 of 1
Obiekt badany Tested product	Zbiornik ciśnieniowy / Pressure vessel KS-50-12 Nr / No: 19446, 19447 Wykonany wg rys. nr 780-155-000 / made as per drawing no. 780-155-000
Zakres badań Scope of testing	Badaniom poddano złącza spawane wykonane podczas wytwarzania zbiornika: 100% spoin + SWC + 10 mm po obu stronach. Testing covered welded T and Butt joints made during the manufacture of the vessel: 100% welds + SWC + 10 mm on both sides.
Stan powierzchni badanej Condition of the test surface	Surowa po spawaniu, oczyszczona z luźnych zanieczyszczeń, sucha. Raw after welding, cleaned of loose dirt, dry.
Warunki badania Test conditions	Natężenie światła >700 lx / Light intensity >700 lx, odległość badania ~500 mm / Test distance ~500 mm, kąt patrzenia > 30° / Viewing angle > 30° temperatura otoczenia 20°C / Ambient temperature 20°C
Wyposażenie badawcze i pomiarowe Testing and measurement equipment	Miernik światła białego L-20A nr: 1944/2001 White light meter L-20A no.: 1944/2001, termometr: TES1312A nr: 080117400 / Thermometer: TES1312A no.: 080117400 suwmiarka nr: 15151048 / slide caliper no.: 15151048, spoinomierz INSIZE 4838-1 nr: 2205121516 / weld gauge INSIZE 4838-1 no.: 2205121516, przymiar, lupa, latarka, lusterko. / gauge, magnifying glass, flashlight, mirror.
Metoda spawania /Welding method	135
Pozycja spawania /Welding position	PA/PB
Gatunek materiału /Material grade	S355J2/P355GH/P265GH/P355NL1/P355NL2
Obróbka cieplna po spawaniu Heat treatment after welding	Bez obróbki No treatment
Instrukcja badania /Testing instructions	1/VT/2014
Przepis / poziom akceptacji Acceptance provision/level	PN-EN ISO 5817 / poziom jakości B PN-EN ISO 5817 / quality level B
Stosowane normy/Applied standards	PN-EN 13018, PN-EN ISO 17637, PN-EN ISO 5817, PN-EN ISO 6520-1
Wynik badania/Test result	W wyniku przeprowadzonych badań nie stwierdzono niedopuszczalnych niezgodności. Testing found no unacceptable non-compliance. Pozytywny – spełnia poziom jakości B / Positive – meets the quality level B
Miejsce i data badania: Place and date of the test: Poznań, 11.06.2025r.	Badania wykonał: / Tests performed by: Opracował: Robert Hoffa R. Hoffa Certyfikaty kompetencji nr: Competence certificates no.: TSP-00701-VT2-01 2527-00701-PED-VT2-00

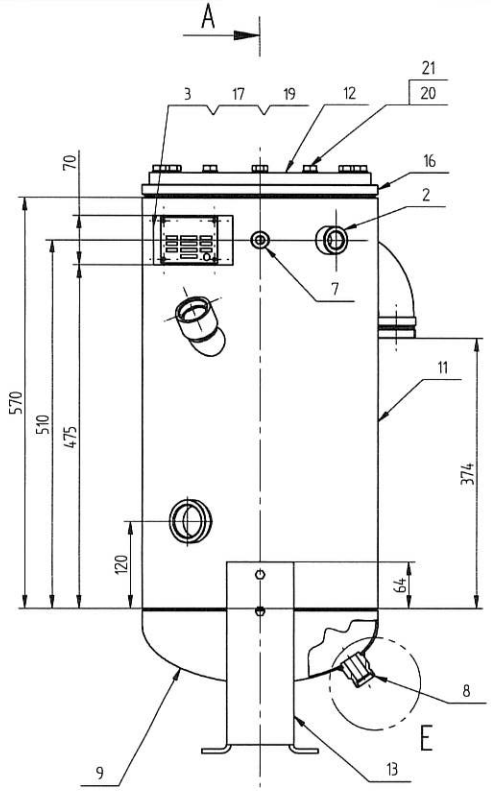

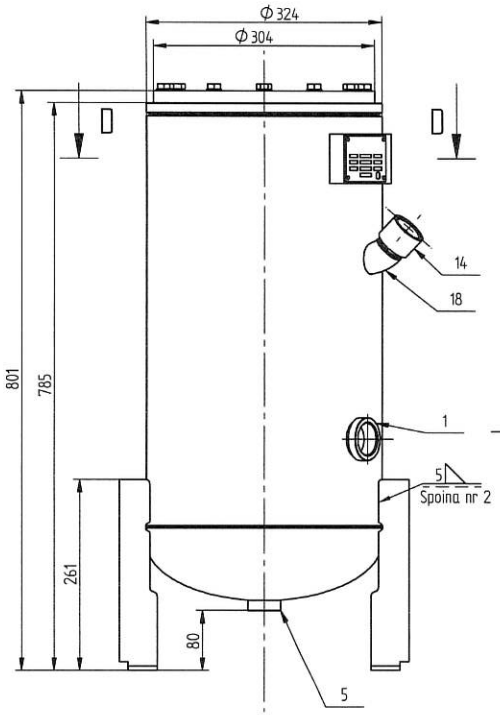

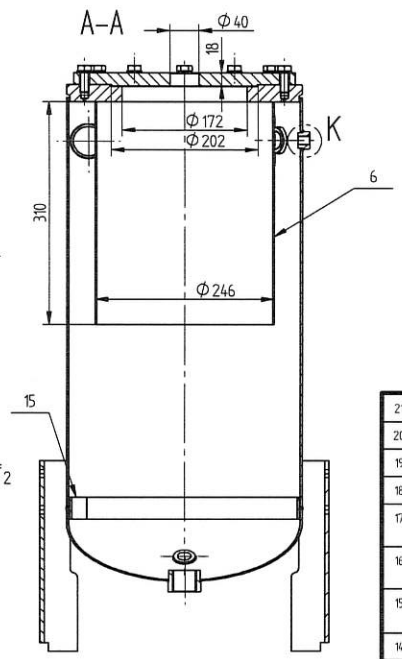

Kategoria II moduł A2 grupa 2 Dyrektywa PED 2014/68/UE

Projekt, wytwarzanie, badanie, eksploatacja według warunków Urzędu Dozoru Technicznego WUDT/UC/2003

Charakterystyka techniczna		
Wytwórca		Airpol
Ciśnienie obliczeniowe	Po [MPa]	1,2
Najwyższe dopuszczalne ciśnienie	PS [bar]	12
Ciśnienie próbne	PT [bar]	22
Najwyższa temperatura robocza	TS max [°C]	130
Najniższa temperatura robocza	TS min [°C]	0
Pojemność zbiornika	V [L]	50
Medium		Powietrze, olej
Współczynnik wytrzymałości złącza spawanego	Zb	0,7
Naddatek na korozję	C2 [mm]	0,5
Badanie NDT WUDT/UC/2003 (złącza nie- obwodowe)	Badanie RT/UT	0% spoin

LP.	NAZWA CZĘŚCI	IL.	NR RYS/NORMA	MATERIAŁ	NORMA MAT.	NORMA PRZED.	WYMIAR	INDEKS	MASA
21	Podkładka sprężysta	12	PN/M-82008	5.8			12	NPD0006	0,048 kg
20	Śruba	12	PN-EN ISO 4032	5.8			M12x30	NSR0050	0,511 kg
19	Nit	4	ISO 1051	AL			3x8	NNT0004	0,001 kg
18	Kolano hamburskie	1	DIN2605	P265GH	PN-EN 10028-2	EN 10253-2	42,4x3,6	MZH0023	0,128 kg
17	Tabliczka znamionowa	1	993-00-008	AL				MCM2810	0,007 kg
16	Kołnierz fi 324	1	780-56-005	S355J2+N	PN-EN 10025-2	PN-EN 10029		MCM1539	10,439 kg
15	Podkładka	1	780-56-002	S355J2+N	PN-EN 10025-2	PN-EN 10051 PN-EN 10029		MCM4865	0,693 kg
14	Króciec M36x1,5	1	780-54-008	S355J2H	PN-EN 10210	PN-EN 10210-2	M36x1,5	MCM0331	0,264 kg
13	Wspornik	2	780-33-006	S235JR	PN-EN 10025-2	PN-EN 10029		MCM3624	4,086 kg
12	Pokrywa	1	780-33-004	S355J2+N	PN-EN 10025-2	PN-EN 10051 PN-EN 10029		MCM3620	9,078 kg
11	Płaszcz	1	780-155-010	S355J2+N	PN-EN 10025-2	PN-EN 10029		MCA8460	13,256 kg
10	Rura	1	780-155-006	S355J2H	PN-EN 10025-2	PN-EN 10210	48,3x3,2	MCB0365	0,700 kg
9	Dno elipsoidalne fi324x3 H=101	1	780-143-001	S355J2+N	PN-EN 10025-2	PN-75/M-35412		MCA6554	2,536 kg
8	Króciec M30x2	1	780-142-002	S355J2G3	PN-EN 10025-2	PN-EN 10210	M30x2	MCA6332	0,156 kg
7	Króciec	1	780-14-000p7	S355J2	PN-EN 10025-2	PN-EN 10060	G1/4	MCM2243	0,043 kg
6	Przegroda	1	780-14-000p5	S235JR	PN-EN 10025-2	PN-EN 10029		MCM1457	3,717 kg
5	Króciec	1	780-11-000p8	S355J2	PN-EN 10273	PN-EN 10060	G1	MCM0919	0,188 kg
4	Króciec M52x2	1	741-00-131	St3s			M52x2	MCM0923	0,208 kg
3	Stopka pod tabl. znam	1	580-30-011	S235JR	PN-EN 10025-2	PN-EN 10029		MCM6742	0,131 kg
2	Króciec G3/4"	1	162-30-004	S355J2H	PN-EN 10210	PN-EN 10210	G3/4	MCM0866	0,176 kg
1	Króciec G1 1/2"	1	140-03-033	S355J2G3	PN-EN 10025-2	PN-EN 10210	G1 1/2	MCM7562	0,194 kg

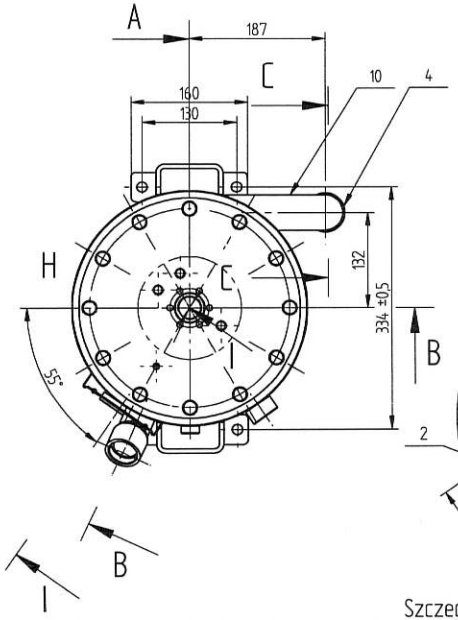

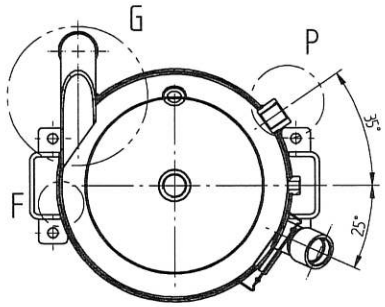

D–D

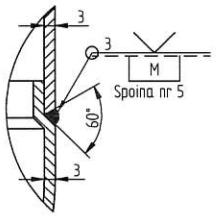

Szczegół
Wykonanie dopuszczalne

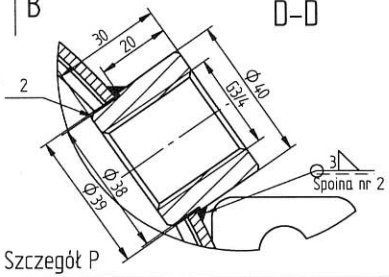

Szczegół P

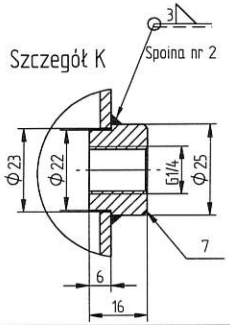

Szczegół K

OBOWIĄZUJE DO PRODUKCJI SERYJNEJ		Data		Podpis		
Konstruował	M. Kosmalski	18.03.2022		Materiał:		Masa 46,560 kg
Sprawdził	R. Hoffa			Wymiary:		Format A2
Zatwierdził	A. Jakubczak			Norma:		Podziałka 1:5
Egzemplarz rejestrowany	Przedsiębiorstwo Produkcji Sprężarek Airpol sp. z o.o. ul. Nieszawska 15c 61-021 Poznań			Wyrób KS-50-12		Arkusz 1
DR / TO / DZJ	Nazwa Zbiornik KS-50-12		Zmiana A	Numer rysunku 780-155-000		Indeks MCA8461

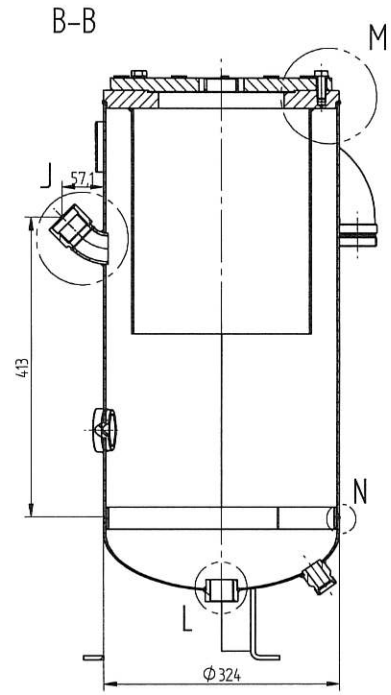

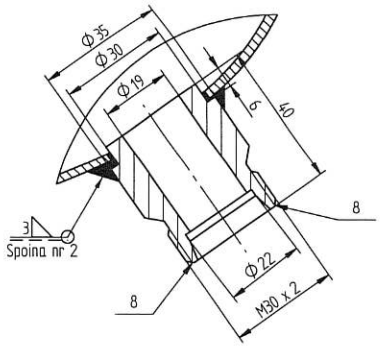

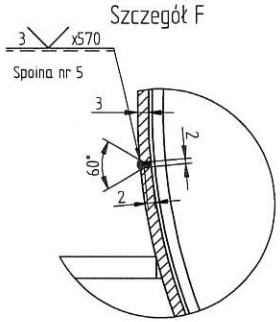

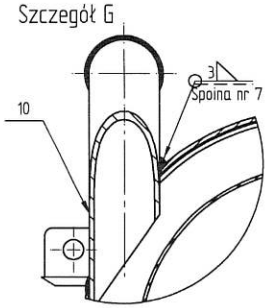

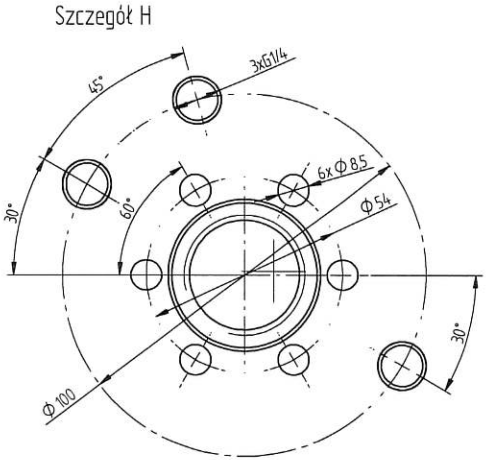

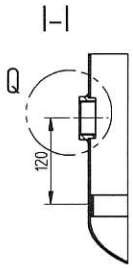

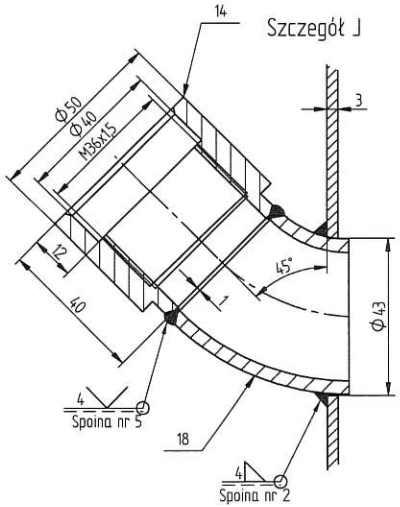

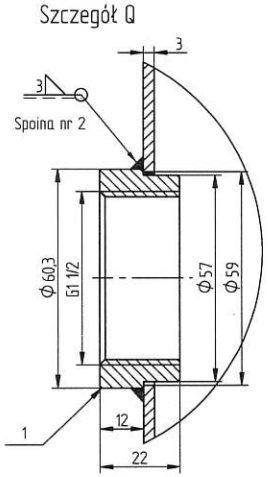

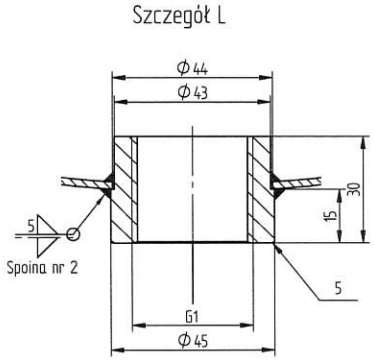

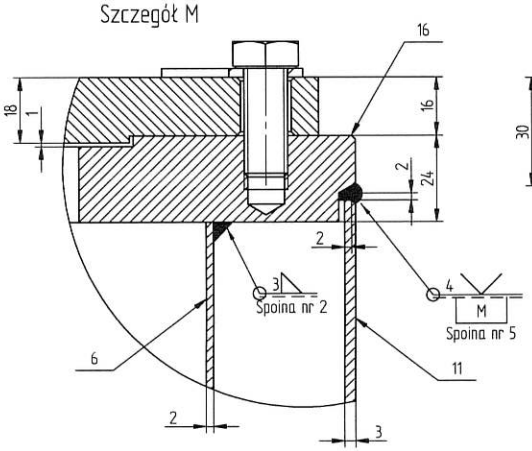

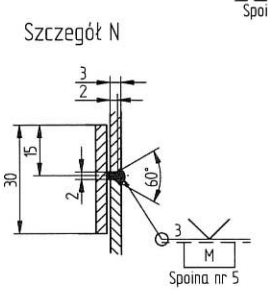

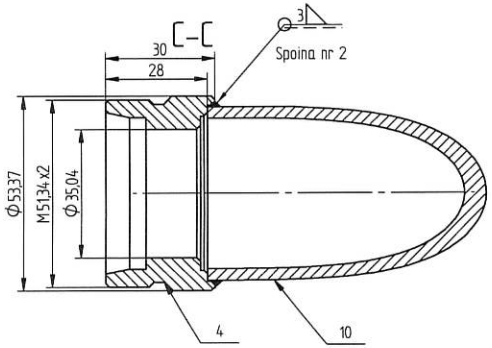

OBOWIĄZUJE DO PRODUKCJI SERYJNEJ			Data		Podpis	
Konstruował	M. Kosmalski	18.03.2022		Materiał:		Masa 46,560 kg
Sprawdził	R. Hoffa			Wymiary:		Format A2
Zatwierdził	A. Jakubczak			Norma:		Podziałka 1:1
Egzemplarz rejestrowany	Przedsiębiorstwo Produkcji Sprężarek Airpol sp. z o.o. ul. Nieszawska 15c 61-021 Poznań			Wyrób KS-50-12		Arkusz 2
DR / TO / DZJ	Nazwa Zbiornik KS-50-12		Zmiana A	Numer rysunku 780-155-000		Indeks MCA8461

Airpol®

Przedsiębiorstwo Produkcji Sprężarek Airpol Sp. z o.o.
ul. Nieszawska 15c, 61-021 Poznań, Polska

Dział Sprzedaży +48 61 650 45 67, airpol@airpol.com.pl
Dział Serwisu + 48 694 477 251, +48 61 650 45 75, serwis@airpol.com.pl

www.airpol.com.pl

Operating manual
No. 07/2022

Vessel

1. Intended use

The pressure vessels listed may be only used in compressed air or argon systems + oil. The pressure vessels have oil separator function.

2. Safety requirements

Vessels may not be used for purposes other than those stated in the device passport or on the rating plate.
Do not exceed parameters stated in the passport or on the rating plate.
Vessel equipment should comply with the regulations in force.
Vessels may be transported only in ambient pressure relief conditions and without the working factor.

3. Packing, storage and transport

Vessels is packed on pallets for transport. Vessels may be transported by any means of transport.
Loading and transport should be performed in compliance with the appropriate regulations.
Connector pipes have been secured with plugs.
Vessels should be stored in dry, covered places and secured from moving.

4. Location and installation

The vessel should be set in a covered area. It can operate in temperatures specified in the data sheet and on the nameplate.
It should be set so that it provides access to all parts of the vessel during testing, cleaning or revision.
The vessel must have: safety valve against pressure increase above the allowable pressure with respect to supply sources, gauge, gauge tap, condensate drain.
The connection between the safety valve and the vessel can not be of smaller diameter than the valve inlet.
In particular, the safety valve is important that should be mounted on the vessel without interpositioning possible; the valve should be adjusted and sealed for the pressure lower than or equal to the admissible pressure, the value of this pressure should be marked on the pressure gauge with a red line.

Operation of the safety valve should be checked according to the safety valve instructions.
Between the vessel and the safety valve, a shut-off valve must not be installed.
The installation should prevent forces and bending moments (from the system) from being transferred onto the stub-pipes.
Rating plate should be well visible at all times.
Designed legs are adjusted to the weight of the vessel (including the weight during the pressure test).

5. Vessel operation

5.1.Conditions of putting the vessel in operation

The vessel can be put in operation if it:

- does not pose any threat to the safety of the public and the surroundings
- is fully equipped with appurtenances and safety devices according to any and all applicable regulations.
- has been tested and meets the requirements applicable for the country of the user.

5.2. Pre-operation activities

- Check if all the necessary equipment has been installed
- Check for any foreign substances or objects inside the vessel
- Check if the connections and cover mounting screws have been tightened properly

5.3. Putting in operation

Pressurize the vessel to the working pressure and check for leaks. If there are leaks, put the vessel out of operation, depressurize and remove the fault.

5.4. Using the vessels

Vessels must be used according to their intended use and any regulations in force.
In appropriate time intervals (according to the regulations in force), security valve should be inspected with the use of bubbling procedure.
Vessel equipment may be disassembled only when the pressure inside the vessel reaches the value of atmospheric pressure.
Repair any paint chips resulting from installation or operation

Vessels should be immediately disconnected in the case of:

- any leakages in removable connections
- vessel perforation
- failure or malfunction of vessel equipment (in particular of the security valve and manometer)
- the supply device control system not ensuring the working factor parameters within the accepted range.
- shell deformation
- exceeding the acceptable temperature

6. Vessel maintenance

Cleaning and maintenance should be performed so as not to damage the walls of the vessel and its fittings.
Cleaning must be safe for employees.
The vessel is cleaned inside and outside. Do not damage the exterior paint. Any losses must be repaired.
All work on the vessels must be performed only by designated trained personnel who know the pressure equipment regulations.

7. Vessel repairs

The vessel must not undergo any welding, and pressure parts must not be tampered with. Repairs may only be carried out by persons and companies with relevant authorizations.

Quality Manager

L. Jakubczak

(-) Leszek Jakubczak

AIR TEK SRL

Via Pizzocaro, 15 36075 Montecchio Maggiore
TEL. 0444/492541 FAX 0444/497441
P.IVA E C.F. IT 02731550246
e-mail info@airteksrl.com web: www.airteksrl.con

COMPONENTI PNEUMATICI E OLEODINAMICI

DICHIARAZIONE DI CONFORMITÀ ai sensi dell'allegato IV della direttiva europea 2014/68/UE.

*Declaration of conformity according to european directive **2014/68/UE** annex IV.*

VALVOLA DI SICUREZZA (IV° categoria) a scarico diretto per aria, gas inerti, vapore saturo, fluido tipo 2

Safety valve (class IV°) direct drain for air, inert gas, saturated vapor, fluid type 2

Numero di serie Serial Number	Scheda Collaudo n° Test Report No°	Nr. Pezzi Nr. of Pieces	Taratura Calibration (Bar)	Tipo di guarnizione Gasket type	Tipo Type
NS376	**1814**	**65**	**11**	**VITON**	**VS34APED**

Si dichiara che l'attrezzatura a pressione sopra descritta soddisfa i requisiti essenziali di sicurezza previsti nell'allegato I della Direttiva 2014/68/UE.
Si dichiara inoltre che la valvola ha superato con esito favorevole la prova idraulica a 37,75 bar e il controllo finale della taratura.
We declare that the pressure equipment described above satisfy the essential safety requirements of annex I of Directive 2014/68/UE annex IV
We also declares that the valve has passed the hydraulic test with a favorable outcome to 37.75 bar and the final check of the calibration.

COMPONENTI COMPONENTS	MATERIALI / MATERIAL
a) Corpo Valvola/Valve Body	CW614N UNI EN 12164
b) Guarnizione / Gasket	NBR – VITON
c) Otturatore / Shutter	CW614N UNI EN 12164
d) Ghiera / Ring Nut	CW614N UNI EN 12164
e) Molla / Spring	UNI EN 10270-1 DH
	UNI EN 10270-3 1.4310 N5
f) Spillo / Pin	UNI EN 10263-2 1.0303
g) Piastrina / Plate	ALLUMINIO / ALLUMINIUM
h) Anello / Ring	UNI EN 10270-1 SM

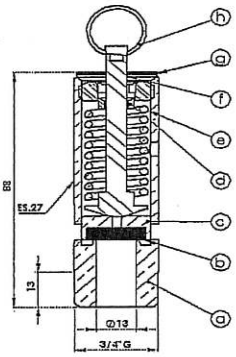

CARATTERISTICHE TECNICHE / TECHNICAL DATA	
Marchio del costruttore / Constructor's mark	AIR TEK
Diametro Nominale Ingresso / Nominal Diameter	3/4"
Diametro Orifizio / Orifice Diameter	13mm
Pressione Nominale Ingresso / Nominal Pressure	25 bar
Alzata / Lift (mm)	4,564
Coefficiente di efluso / Discharge Coefficient K	0,78
Sovrapressione / Overpressure	10%
Scarto di chiusura / Closing variation	15%
Portata di scarico l/min Aria/Discharge flow rates AIR l/min	15310
Campo di taratura / Calibration Range	0.5 – 18 bar
Temperatura di esercizio / Working temperature HNBR	-30°C +150°C
Temperatura di esercizio / Working temperature NBR	-10°C +100°C
Temperatura di esercizio / Working temperature VITON	-20°C +250°C
Temperatura di esercizio / Working temperature EPDM	-40°C +150°C

Per la verifica della conformità alla direttiva sono state utilizzate le norme e le procedure di seguito indicate:

For the verification of compliance with the directive have been used the standards and procedures set out below:

Attestato di esame CE *CE examination certificate*	Modulo B/Form B tipo di produzione / production type **n° PED-0948-PBprod-20243-23 ON 0948 TUV**
Certificato di qualità della produzione *Certificate of production quality assurance*	Modulo D/Form D **n° PED-0948-QSD-461-15 rev.4 del 20/12/21 ON 0948 TUV**
Norme applicate *Standards applied*	Secondo direttiva **2014/68/UE** – norma ISO 4126 According to directive **2014/68/UE** – standard ISO 4126

Identificazione dati marcati sulla valvola / Identification data marked on the valve

***Marcatura CE** / CE mark, **Modello della valvola** / Valve model, **Individuazione dell'organismo notificato** / Notified authority identification, **Numero di serie** / Serial number, **Pressione di taratura in bar** / Calibration pressure in bar, **Pressione nominale** / Nominal pressure, **Diametro dell'orifizio** / Orifice diameter, **Portata di scarico in l/min** / Discharge flow rates in l/min, **Marchio del fabbricante** / Constructor's mark.*

Firma del fabbricante / Signature of the manifacturer

Montecchio Maggiore 15/10/2024

COPIA CONFORME

Nome e indirizzo dell'organismo notificato Name and adress of the notified authority	**TUV ITALIA srl 0948** viale Fulvio Testi 280/6 , 20126 (MI)

AIR TEK SRL

Via Pizzocaro, 15 36075 Montecchio Maggiore VI
TEL. 0444/492541 FAX 0444/497441
P.IVA E C.F. IT 02731550246
e-mail info@airteksrl.com web: www.airteksrl.com

COMPONENTI PNEUMATICI E OLEODINAMICI

DECLARACIÓN DE CONFORMIDAD(con arreglo al annexo IV – directiva europea 2014/68/UE) /DECLARATION DE CONFORMITE(conformément à l'annexe IV de la Directive Européenne 2014/68/UE/KONFORMITATSERKLARUNG(gemass Beilage IV der europeischen Richtlinie 2014/68/UE)

VÁLVULA DE SEGURIDAD (IV CATEGORIA) ESCAPE DIRECTO DEL AIRE, GAS INACTIVO,VAPOR SATURADO/SOUPAPE DE SURETE (IV CATEGORIE)A' ECHAPPEMENT DIRECT POUR AIR, GAZ INERTES, VAPEUR SATURANTE/SICHERHEITSVENTILE (IV KATEGORIE) MIT DIREKTEM ABLASS FUER LUFT , EDELGAS , SATTDAMPF

Numero de Serie/Numéro de série/Seriennumer	Feuille de test nr. Hoja de prueba nr. Testblatt nr.	No. Piezas N. de pièces Stuelzahl	Calibracion Calibration Eichung	Junta Joint Dichtung	Familia Famille Familie

Nos declaramos que los equipos a presión describidos, satisfacen las condiciones esenciales de seguridad como también descripto en : anexo I - Directiva 2104/68/UE.,Declaramos otrosi que los equipos han pasado la prueba de presión pneumatica de nuestro Sistema Calidad, con exito afirmativo a la presión de 35,75 bar y la prueba final de calibratura . On declare que l'équipement à pression décrit il satisfait les prescriptions essentielles de sûreté prevuées dans l'annexe I de la Directive 2104/68/UE et que s'y appliquent.On déclare en outre que l'équipement a été soumis, comme prévu par notre système de qualité d'entreprise, à l'essai de pression pneumatique avec résultat favorable à la pression de 35,75 bar et au contrôle final d'étalonnage . Bescheinigen wir dass den wesentlichen Sicherheitsforderungen nachkommt , die in der Beilage 1 der Richtlinie 2104/68/UE vorgesehen und an sie anwendbar sind. Ausserdem bescheinigen wir dass die Anlage , laut des Qualitaetssystems unserer Firma an folgende Pruefungen mit guenstigem Ergebnis unterzogen wurde - Pruefung von pneumatischem Druck (Pruefungsdruck 35,75bar)

MATERIAL /MATERIEL	MATERIALEN
a) Cuerpo valvula/corps soupape/Ventilkoerper	*CW614N UNI EN 12164*
b) Junta/Joint/Dichtung	*HNBR – NBR – VITON - EPDM*
c) Obturador/obturateur/verschluss	*CW614N UNI EN 12164*
d) abrazadera/embout/nutmutter	*CW614N UNI EN 12164*
e) resorte/ressort/feder	*UNI EN 10270-1 DH UNI EN 10270-3 1.4310 NS*
f) punzon/epingle/nadel	*UNI EN 10263-2*
g) plaqueta/plaquette7streifen	*ALLUMINIUM*
h) Anello / Ring	*UNI EN 10270-1 SM*

CARACTERISTICAS TECNICAS / CARACTERISTIQUES TECHNIQUES /TECHNISCHE EIGENSCHAFTEN	
Marca del fabricante Sigle du constructeur/ Erzeugersigel	AIR TEK
D.N. de accesso/ D.N. entrée/ D.N. Eingang	
Diametro agujero/ Diamètre orifice/Oeffnungsdurchmesser	
P.N. de acceso/ P.N. entrée / P.N. Eingang	25 bar
Elevation / Leève/ Hub mm	
K codigo de flujo/ K coeffic. de dépense/ K Abflusskoeffizient	
Sobrepresión/ Surpression/ Ueberdruck	
Desviación de cierre / Ecart de fermeture/ Verschlussabweichung	
Descarga/debit d'evacuation/Durchfluss l/min	
Calibrado/ Champ d'étalonnage/Eichungsbereich	0.5 – 20 bar
Temperatura d'ejercicio Température d'exercise/ Betriebstemperatur HNBR	-30°C +150°C
Temperatura d'ejercicio Température d'exercise/- Betriebstemperatur .NBR	-10°C+90°C
Temperatura d'ejercicio Température d'exercise/ Betriebstemperatur VITON	-10°C +250°C
Temperatura d'ejercicio Température d'exercise/ Betriebstemperatur EPDM	-40°C +150°C

Para comprobar la conformidad con la directiva, se han utilizado las normas y procedimientos indicados seguidamente: /Pour la verification de la conformité à la directive, nous avons utilisé les norme set les procédires indiquée ci-dessous: /Zwecks der Uberprufung der Einhaltung der Richtlinie sind folgende Normen und Verfahren angewandt worden:

Certificado de examen CE del tipo/ Attestation d'examen CE du type EG-Prufzeugnis des typs	Modulo B/Module B / Formular B n° 0537/02/CE 28/02/2013 ON 0100 INAIL n° 0539/02/CE 28/02/2013 ON 0100 INAIL
Certificado de calidad de la production/Certificat de qualité dé la production Zertifikat der Produktionsqualität	Modulo D/Module D / Formular D n° PED-0948-QSD-461-15 REV.2 Via Carducci 125 Sesto S Giovanni MI
Normas aplicades / Normes appliqués/Angewande Vorschriften	Segun directiva / D'apres la directive / Entsprechend der Richtlinie 2014/68/UE –ISO 4126-1

Identificacion datos marcados en la valvula/ Identification des donne marquèes sur le soupape/ Identifizierung der auf dem ventil gestempilten Daten marcado CE / marquage CE / CE kenzeichnung - modelo de valvula / modelo de soupape / ventilmodell -identificacion del organismo notificado/ identification de l'organisme notifié / Identifizierung der zugestellten behorde - numero de serie / numero de série / seriennummer – Presion de calibracion en bar /pression de tarage en bar / eichdruck in bar - Presion nominal / pression nominale / nenndruck- diametro del orificio / aire de l'orifice / offnungsdurchmesser - caudales de salida in l/min / debit d'evacuation en l/min / ablassleistungen in l/min - marca del fabricante / marque du fabricant / herstell Warenzeichen

Lugar y fecha/lieu et date/Ort und datum

MONTECCHIO MAGGIORE

Firma del fabbricante/Segnature du fabricant/Unterschrift des Herstellers

INSTRUCTIONS FOR USE OF THE SAFETY VALVES

INSPECTION OF INCOMING PARTS

Inspect goods upon receipt to make sure that packaging is intact. Should packaging be damaged, please notify AIR TEK and arrange to have the valve examined to make sure that it is in perfect condition.

MOUNTING THE VALVE IN THE CORRECT POSITION . The valve may be mounted in any direction (horizontal or vertical, etc.).However, when installing FAMILY "1" valves, which require manual testing of pressure relief, always make sure that these are mounted in a position to enable these checks to be carried out. In particular, always make sure that nothing can obstruct the vertical stroke of the ring and pin (which would prevent the valve from operating to full capacity). For manual pressure relief tests to be realistic, these must be carried out with at least 70% of the pressure rating of the valve.

ASSEMBLY Should the user decide to use a seal (Teflon tape or liquid) this must only be placed on the thread. Seals must never be placed on any other part of the valve to be assembled. When assembling the valve, make sure it is tightened correctly so as to withstand machine vibrations. Non-compliance could result in loss of pressure or cause the valve to work loose. AIR TEK guarantees correct functioning of its valves when tightened to a maximum torque of 30 N/m. Higher tightening torques may prevent the valve from functioning correctly.

IMPORTANT Correct functioning cannot be guaranteed in case of valves that have been tampered with (cut or deformed, especially at the top), or from which the data plate is missing. AIR TEK SHALL NOT BE RESPONSIBLE FOR ANY DAMAGE CAUSED BY VALVES THAT HAVE BEEN MODIFIED. Replace any such valves immediately, in order to ensure correct operation of the assembly, and investigate and remove the reasons that made such modifications necessary in order to prevent further tampering in future. AIR TEK guarantees the correct valve functioning for a maximum of **six month** of warehouse storage at ambient temperature, after that period, we recommend to make periodically tested of calibration, by specialized personnel.

CORRECT AND INCORRECT USE These valves are designed and manufactured for use with different types of gaseous fluids within the temperature and pressure ranges defined in the technical specifications. Due to the nature of the materials used, they are not suitable for use ***with aggressive gases or vapours. In particular, they must never be used on vessels or circuits that contain ammonia, acetic acid and acetates in general, acetone, gaseous halogen, hydrochloric, hydrobromic or hydrofluoric acid, nitric acid, sulphuric acid, hydrogen dioxide.*** Do not use in vessels and circuits that contain materials with a solidification point close to ambient temperature (wax, paraffin, grease with low melting point) or organic solvents.

RISK FACTORS AND CORRECT INSTRUCTIONS FOR USE

Valves are delivered after being tested and approved for use at the pressure values and temperature and for the purposes defined in the technical specifications. If the valve does not work, this may be due to the condensation and solidification of pressurised gas if this contains materials with a low melting point. In particularly dirty environments, the valve may become blocked due to deposits of dust and condensate: if the valve is used in environments where dust and condensate combine to form dirt, the valve must be mounted in a place that is protected. The risk for personnel who come into contact with vented air is related to its chemical make-up or temperature. As regards chemical make-up, this risk should not exist, as the valve must not be used with aggressive gases. If the gas used is not aggressive but could, nonetheless, be detrimental to the health of personnel, channel exhaust air through ducts to extraction fans. As far as the risk of hot steam is concerned, this is low or negligible at 30 cm from the valve vent axis. When used with steam circuits in confined areas, the risk of exhaust steam short circuiting live conductors must be taken into consideration during the design stage and the appropriate measures must also be implemented to prevent condensate stagnation. Apart from the risk of breakage due to non-compliance with the specific operating conditions, any possible risks as regards flying particles are connected with the use of the valve inside closed environments that are not designed to support the increased pressure generated by blowdown or as a result of inadvertently covering the valve. Keep air vents clear at all times and never place anything over the valve. As regards noise, this is a function of the vented pressure squared. When pressure increases, noise at 1 meter from the valve is less than 90 dBA. Exposure to noise is brief and infrequent, as blowdown is an exceptional event. There is therefore no need to warn of exposure to noise levels of > 90 dB within the blowdown area and operators are not required to use hearing protection.

AIR TEK s.r.l.